Model 805 Accelerometer

TO-5 Series Accelerometer
2-Wire IEPE Interface
Low-Cost, Embedded Applications
Wide Bandwidth to 15kHz

The Model 805 is a miniature adhesive mount IEPE accelerometer built on a 3-pin TO-5 header. It is available in ±50g and ±500g dynamic ranges and offers a flat frequency response to 15kHz. The accelerometer features a hermetic construction in a TO-5 header configuration. The model 805 incorporates a stable piezo-ceramic crystal and an integrated charge converter amplifier in a 100% shielded housing suitable for many embedded OEM applications.
The accelerometer is offered in two configurations; one for adhesive mounting and one for stud mounting.

FEATURES

- ±50g and ±500g Range
- Wide bandwidth up to 15kHz
- TO-5 Configuration
- Hermetically Sealed
- -54°C to +100°C Operating Range
- Case Grounded Design

APPLICATIONS

- Machine Monitoring
- Low-Cost OEM Installation
- Permanent Structural Study
- Embedded Sensing Solution

dimensions

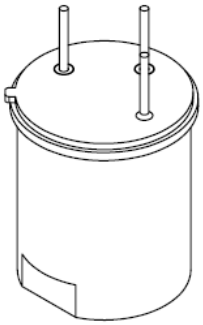

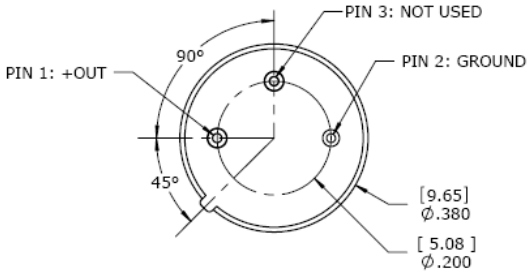

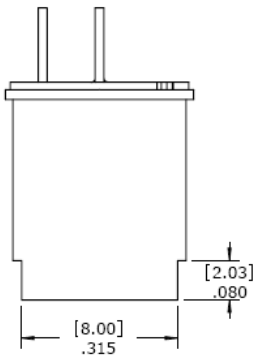

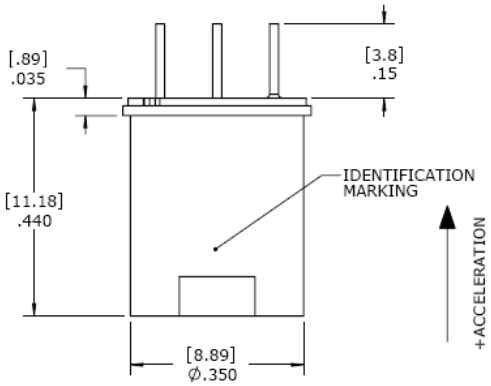

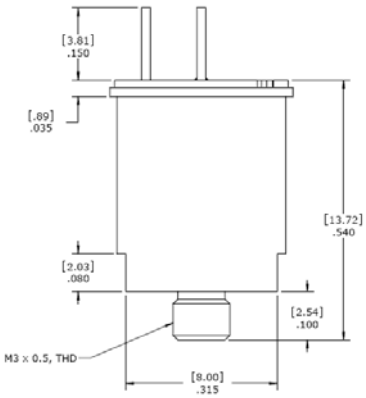

M3 Stud Mounting for -01 Option

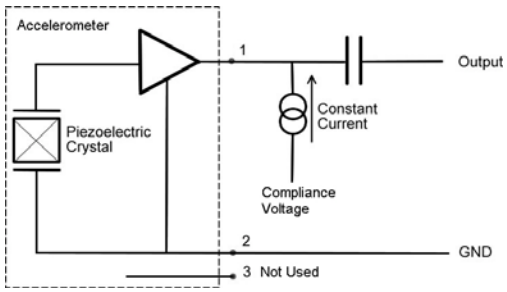

32 Journey Ste. 150 Aliso Viejo, CA 92656 949-716-5377 t&m@meas-spec.com

Model 805 Accelerometer

performance specifications

All values are typical at +24°C, 100Hz and 4mA excitation unless otherwise stated. Measurement Specialties reserves the right to update and change these specifications without notice. Standard product parameters are described in PSC-1001 for Embedded AC Accelerometers.

Parameters			
DYNAMIC			**Notes**
Range (g)	±50	±500	
Sensitivity (mV/g)	100	10	±10%
Frequency Response (Hz)	1-8000	1-8000	±1dB
Frequency Response (Hz)	0.4-10000	0.4-12000	±3dB
Natural Frequency (Hz)	34000	34000	
Non-Linearity (%FSO)	±1	±1	
Transverse Sensitivity (%)	5	5	
Shock Limit (g)	5000	5000	
ELECTRICAL			
Compliance Voltage (Vdc)	18 to 30	18 to 30	
Excitation Current (mA)	2 to 10	2 to 10	
Bias Voltage (Vdc)	8 to 12	8 to 12	Room Temperature
Bias Voltage (Vdc)	6 to 13	6 to 13	-54 to +100°C
Output Impedance (Ω)	<100	<100	
Residual Noise (g RMS)	0.0003	0.0009	Broadband 1Hz to 10kHz
Grounding	Case grounded to mounting surface		
ENVIRONMENTAL			
Temperature Response (%)	±10	±10	
Operating Temperature (°C)	-54 to +100		
Storage Temperature (°C)	-54 to +125		
PHYSICAL			
Sensing Element	Piezo-Ceramic		
Case Material	Stainless Steel		
Weight (grams)	5.0		
Mounting	Adhesive or Circuit Board (M3 Stud Mounting for -01 Option)		

Calibration supplied: CS-SENS-0100 NIST Traceable Amplitude Calibration at 100Hz

Wiring color code: See schematic

The information in this sheet has been carefully reviewed and is believed to be accurate; however, no responsibility is assumed for inaccuracies. Furthermore, this information does not convey to the purchaser of such devices any license under the patent rights to the manufacturer. Measurement Specialties, Inc. reserves the right to make changes without further notice to any product herein. Measurement Specialties, Inc. makes no warranty, representation or guarantee regarding the suitability of its product for any particular purpose, nor does Measurement Specialties, Inc. assume any liability arising out of the application or use of any product or circuit and specifically disclaims any and all liability, including without limitation consequential or incidental damages. Typical parameters can and do vary in different applications. All operating parameters must be validated for each customer application by customer's technical experts. Measurement Specialties, Inc. does not convey any license under its patent rights nor the rights of others.

ordering info

PART NUMBERING Model Number+Range

```
805-GGGG-XX
      |    |_____ Optional Stud Dash Number
      |_____ Range (0050 is 50g)
```

Dash Number	Stud Options
-01	M3 x 0.5 6g

Example: 805-0050
Model 805, 50g

32 Journey Ste. 150 Aliso Viejo, CA 92656 949-716-5377 t&m@meas-spec.com