P105 High Pressure Transducer

- **Range 0-1000 to 4000 bar [15k psi to 60k psi]**
- **Stainless steel diaphragm**
- **High level output in option**
- **Cable gland output**
- **±0.3% accuracy**

Specific model P125 up to 7 000 bar

DESCRIPTION

The **P105** is a high pressure transducer designed to measure static and dynamic pressure under a wide variety of conditions, including hostile environments. The mechanical design and a stainless steel diaphragm allow the sensor to withstand most aggressive liquids.

The sensing element is fitted with a temperature compensated Wheatstone bridge equipped with thin strain gauges. With **the P105-A1/A2** Series Measurement Specialties, Inc. offers a high level output model.

For higher range, a specific sensor, model **P125**, can measure up to 7 000 bar. Do not hesitate to contact and ask your local MEAS representative for its technical specification.

With many years of experience as a designer and manufacturer of sensors, Measurement Specialties, Inc. has the expertise to customize and/or design sensors for specific uses and testing environments. To meet your needs we also offer complete turnkey systems. Our conditioning electronics can power the sensor, amplify the electronic signal, and display the data digitally. A turnkey measurement system arrives with matched components, formatted, calibrated and ready for your immediate use.

FEATURES

- M20x1.5 high pressure port
- Metal / metal screw sealing
- Optional Connector output
- High Level Tension Output Available
- Heavy duty body

APPLICATIONS

- Hydraulic regulation process
- Explosion test benches
- Sealing test benches
- Fatigue test benches
- Laboratory and research

STANDARD RANGES

Range in bar	1k	2k	3k	4k
Range in psi	15k	30k	45k	60k

P105 High Pressure Transducer

CHARACTERISTICS

All values are typical at temperature 20±1º C

Parameters	
Operating Temperature Range (OTR)	-20 to 80º C [-4 to 176°F]
Compensated Temperature Range (CTR)	0 to 50º C [32 to 122°F]
Zero Shift in CTR	<2% F.S. / 50º C [/100°F]
Sensitivity Shift in CTR	<2% of reading / 50 ºC [/100°F]
Range (F.S.)	1000, 2000, 3000, 4000 bar, G = gauge type only
Over-Range	
Without Damage	1.5 x F.S or max. 5000bar.
Without Destruction	3 x F.S. or max. 5000bar
Accuracy	
Combined Non-Linearity & Hysteresis	±0.3% F.S.

Electrical Characteristics

Model	**P105**	**P105-A1**	**P105-A2**
Supply Voltage	5 Vdc	10 to 30 Vdc	±15 Vdc (±12 to ±18 Vdc)
F.S. Output [6]	1.5 mV/V	4 V ±5% F.S.	5 V ±5% F.S.
Zero Offset [6]	<± 5% F.S.	0.5 V ±5% F.S.	0 V ±5% F.S.
Input Impedance/Consumption	350 Ω	<25 mA	<25 mA
Output Impedance	350 Ω	1 kΩ [7]	1 kΩ [7]
Insulation under 50Vdc	≥100 MΩ	≥100 MΩ	≥100 MΩ

Notes

1. Electrical Termination: Cable gland, standard length 2m[6.6ft]
2. Material: Stainless steel diaphragm, body in aluminium
3. High pressure connector with metal-metal conic sealing pressure port
4. Weight: 300g [0.66lb]
5. Protection Index: IP50
6. Standard output signal, custom outputs available on request
7. Output impedance standard, available <100Ω on request.
8. CE conformance according to EN 61010-1, EN 50081-1, EN 50082-1

P105 High Pressure Transducer

DIMENSION & WIRING SCHEMATIC (METRIC ONLY)

Dimensions in mm

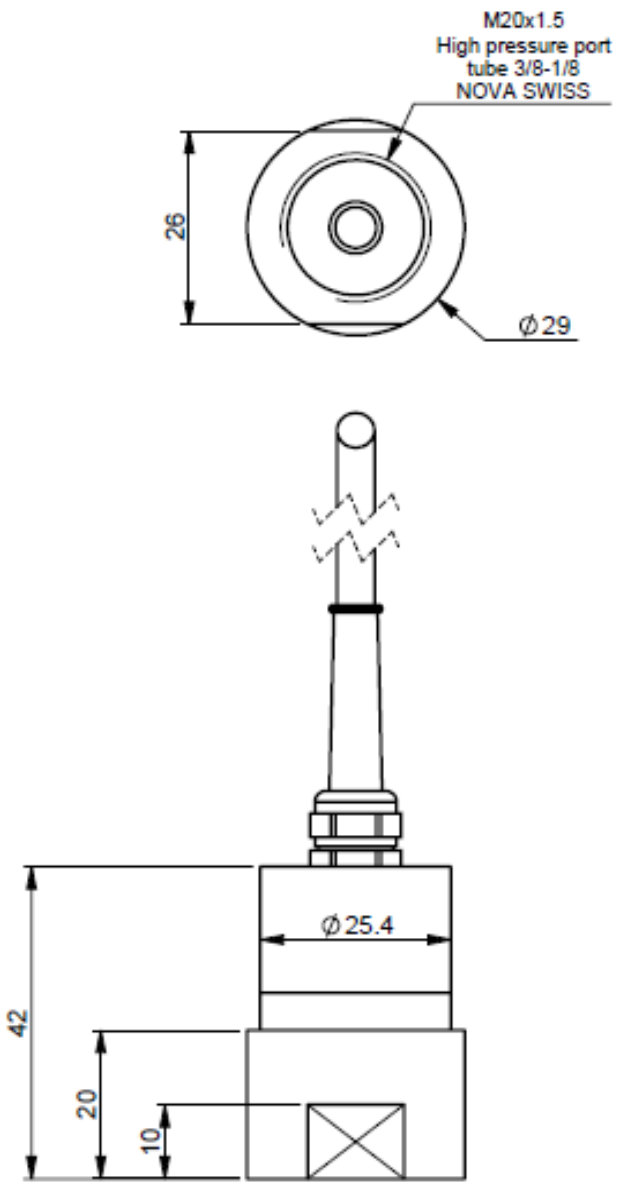

Wiring Schematic

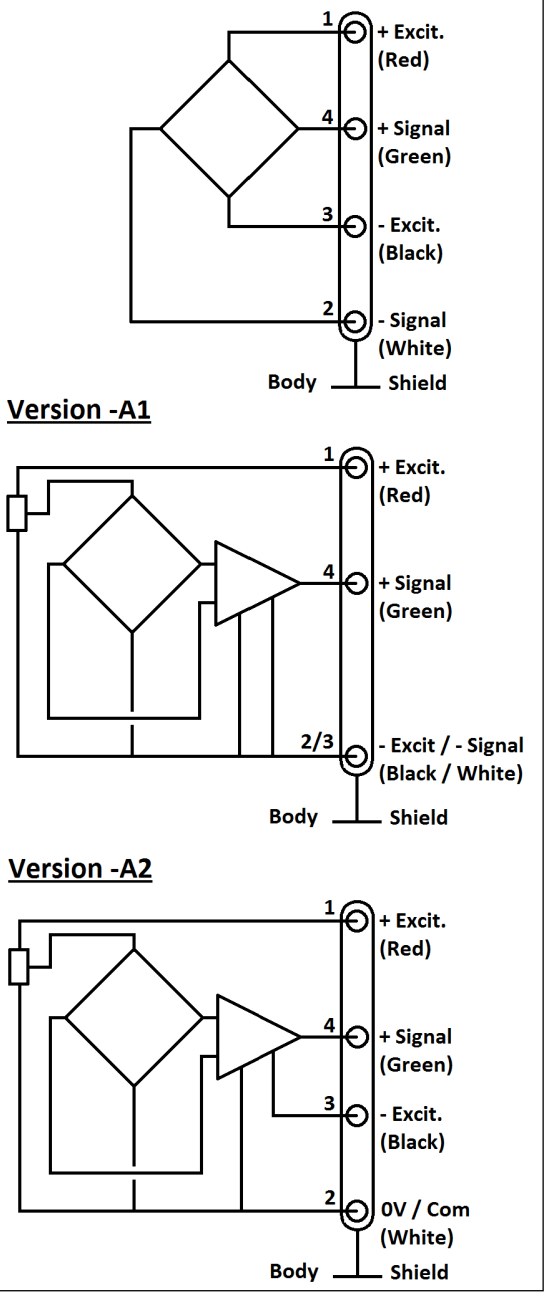

P105 High Pressure Transducer

OPTIONS

A1	: Amplified Tension output with unipolar power supply
A2	: Amplified Tension output with bipolar power supply
ET1	: CTR -20 to 100º C [-4 to 212º F]
ET2	: CTR -40 to 120º C [-40 to 248º F]
L00M	: special cable length, replace “00” with total length in meters

ORDERING INFORMATION

P105 - A1 - 2KBG - /L5M

- /L5M: **Options (L00M, ..)**
- 2KBG: **Range in bar**
- A1: **Power Supply (None, A1 or A2)**
- P105: **Model**

NORTH AMERICA

Measurement Specialties, Inc.
Vibration Design Center
32 Journey - Suite 150
Aliso Viejo, CA 92656
United States USA
Tel: 1-949-716-0877
Fax: 1-949-916-5677
t&m@meas-spec.com

EUROPE

Measurement Specialties
(Europe), Ltd.
26 Rue des Dames
78340 Les Clayes-Sous-Bois,
France
Tel: +33 (0) 130 79 33 00
Fax: +33 (0) 134 81 03 59
cs.lcsb@meas-spec.com

ASIA

Measurement Specialties
(China), Ltd.
No. 26 Langshan Road
Shenzhen High-Tech Park (North)
Nanshan District, Shenzhen
518057
China
Tel: +86 755 3330 5088
Fax: +86 755 3330 5099
pfg.cs.asia@meas-spec.com

The information in this sheet has been carefully reviewed and is believed to be accurate; however, no responsibility is assumed for inaccuracies. Furthermore, this information does not convey to the purchaser of such devices any license under the patent rights to the manufacturer. Measurement Specialties, Inc. reserves the right to make changes without further notice to any product herein. Measurement Specialties, Inc. makes no warranty, representation or guarantee regarding the suitability of its product for any particular purpose, nor does Measurement Specialties, Inc. assume any liability arising out of the application or use of any product or circuit and specifically disclaims any and all liability, including without limitation consequential or incidental damages. Typical parameters can and do vary in different applications. All operating parameters must be validated for each customer application by customer’s technical experts. Measurement Specialties, Inc. does not convey any license under its patent rights nor the rights of others.